Hybrid Spark Plasma Sintering of Materials: A Review

Olusoji Oluremi Ayodele, Mxolisi Brendon Shongwe, Peter Apata Olubambi, Babatunde Abiodun Obadele, and Thabiso Langa

***Abstract*—This article presents a review on hybrid spark plasma sintering technology (HSPS) of engineering materials. Hybrid sintering is a recently developed method used in fabricating materials, which provides a superior heating within and across the regime of the material. It integrates the heating system of spark plasma sintering with an additional resistance or induction heating in order to manufacture materials that require larger size or diameter. Materials obtained through this technique are highly dense due to rapid heating rate which ensues in a very short sintering cycle. Hybrid sintering eliminates thermal gradient that is noticeable in other sintering techniques. Fabricated materials from HSPS are utilized in aerospace, automobile and chemical industries and they tend to yield improved mechanical properties.**

***Index Terms*—Hybrid spark plasma sintering, mechanical properties, phases, microstructures, materials.**

I. Introduction

There is a great focus on the development of engineering materials for emerging technologies. These emerging technologies span from mining, aerospace, automobile and petrochemical industries, etc. Most of the engineering materials are immensely used in several applications due to their thermo-mechanical properties [1]. Powder metallurgy process has been utilized to fabricate these materials, as a re sult of its low cost, good surface finish, increase in material yield and variation of composition [2].

Several fabrication techniques include hot pressing (HP), microwave sintering and spark plasma sintering (SPS) have been reported in the literature to manufacture materials into near net shape [3]. The utilization of conventional sintering (HP) in fabricating materials result in grain growth due to the long sintering cycle and high temperature involved [4]. Also there is a temperature gradient from the edge or surface to the core or inside of the material which affect the mechanical properties of the material [5].

In a bit to minimize grain growth and further improve the properties of materials during fabrication, SPS has proven to possess a great advantage as compared to conventional sintering [6], [7]. The reason is not far-fetched due to the utilization of pulsed direct current and pressure to cause a fast densification of materials [8]. SPS which is also known as field assisted sintering technology (FAST) sinters at lower temperature and consolidates material at a faster rate because of its shorter dwelling time [9]. However, it has been reported to be prone to uneven heat distribution within and across the regime of a large diameter- material thereby resulting to temperature gradient from the core to the edge of the material [10]. The desired phases, microstructures and properties of the manufactured material could be compromised.

The quest to fabricate larger materials with homogeneous heat distribution has ushered to the recently developed hybrid spark plasma sintering (Hybrid Sintering) which offers a better heating as compared to other sintering techniques. Hybrid sintering is the combination of the spark plasma sintering with an additional resistance or inductive heating [11]. This technology supplies a rapid heating rate which enables densification of the metallic powder into fabricated shape at a quicker dwelling time, thereby removing temperature gradient seen in SPS [10]. The combined technology (SPS + additional resistance element (HP) provide a homogeneous heat distribution within and across the material during sintering. Hybrid sintering can be utilized in fabricating different class of materials which include titanium alloys, nickel alloys, ceramics, and other composites etc. The goal of this work is to present the hybrid spark plasma sintering method and review data reported on engineering materials.

II. Overview of Sintering

In powder metallurgy technique, sintering is a process which involves heating of metal powder in a protective environment below its melting point. It is carried out at elevated temperature between 65-85% of the powder's melting point [12]. Novel sintering methods such as hot pressing, hot isostatic pressing, microwave sintering and spark plasma sintering have been reported in literature for fabricating materials [13].

A. Conventional Sintering Techniques

Conventional sintering techniques are also referred as traditional sintering techniques which utilize the application of pressure and temperature to fabricate materials [14]. The fabrication of material through this method results in grain growth due to slow heating rate and long sintering cycle. This tends to affect the microstructures and mechanical properties of the material [2]. Conventional sintering techniques include hot isostatic pressing and hot pressing. Hot pressing technique utilizes pressure and heat to densify materials with the aid of resistance heating. The material or powder is placed in the die

Manuscript received July 15, 2018; revised September 12, 2018.

Olusoji Oluremi Ayodele, Peter Apata Olubambi, Babatunde Abiodun Obadele, and Thabiso Langa are with the Centre for Nanoengineering and Tribocorrosion, School of Mining, Metallurgy and Chemical Engineering, Johannesburg, South Africa (e-mail: sojlags@yahoo.ca).

Mxolisi Brendon Shongwe is with the Institute for Nanoengineering Research, Department of Chemical, Metallurgy and Materials Engineering, Tshwane University of Technology, Pretoria, South Africa.

doi: 10.18178/ijmmm.2018.6.6.407

and it is heated externally by radiation, while the materials are heated by the die through conduction. The techniques result in grain coarsening due to long sintering cycle [15].

B. Spark Plasma Sintering (SPS)

Spark plasma sintering is well known as field assisted sintering techniques (FAST) or pulsed electric current sintering (PECS). It is a newly adaptable method to manufacture a number of materials including titanium, ceramics and aluminum based alloys [16]. In this technique material are charged in a graphite die, and a uniaxial force is exerted during sintering. The heating is accomplished by spark discharges in voids between the particles. As a result of this discharge, the particle surface is refined and energized, and a joule heating is generated between the particles by the electric current [17]. The electric current application facilitates a fast heating rate ensuing in a very short sintering cycle; rapid densification for both conductive and nonconductive powder, with this method grain growth is minimized [18]. Research has proven spark plasma sintering as a better alternative as compared to conventional sintering methods [19]. The size of the sample could however be a challenge in fabricating samples for industrial application which requires much larger samples. Fabricating larger sample with spark plasma sintering could result in heterogeneous properties within the samples due to poor heat distribution as the sample size gets bigger. This indicates a radial thermal gradient that results in heterogeneous radial microstructure of the material [20]. Fig. 1 indicates the fundamentals of the SPS with its operational parts such as graphite die and the punches.

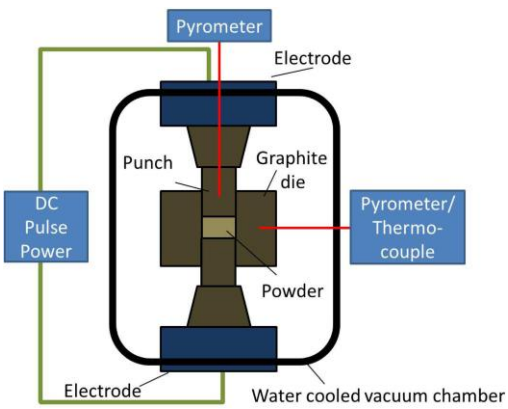

Fig. 1. Schematic of SPS (courtesy of [21]).

C. Hybrid Spark Plasma Sintering (HSPS)

The hybrid sintering integrates the heating system of the spark plasma sintering (FCT system KCE-FCT H-HP D 25 system) with an inductive or resistance heating [22]. The sintering operation allows the passage of electric current through the large material [21] which has a direct impact at the core of the material as compared to the edge. This result in hot core and a cold edge (surface). However, the cold edge is being compensated by utilizing the inductive heating i.e. a thermocouple which supplies heat to the edge of the material. This provides an even heat distribution from the surface to the core of the material, hence better microstructures, phases and mechanical properties could be obtained. The hybrid sintering eliminates thermal gradient and inhibits the development of grain growth. Figure below describes the operations of the hybrid spark plasma sintering with the two heating systems.

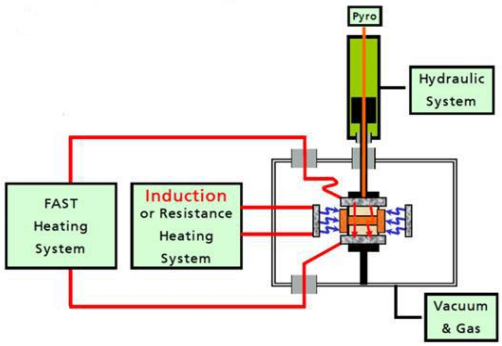

Fig. 2. Schematic representation of hybrid spark plasma sintering (courtesy of [18]).

D. Advantages of Spark Plasma Sintering

The followings are the advantage of spark plasma sintering as compared to conventional sintering technique (hot pressing):

- Rapid heating rate
- Metal powders possess a purified surface
- Grain growth are minimized
- It has a uniform sintering
- It fabricates at lower temperature
- The operation is simple.

III. Sintering Operations

Blended powders are consolidated using the spark plasma sintering (Model HHPD-25, FCT Germany) or Hybrid spark plasma techniques (Model HHPD-25, FCT Germany) with different inner diameter graphite die. Graphite foil of 0.2mm thickness is placed between the punch and the powder, and between the die and the powders for easy removal and significant reduction of temperature heterogeneity. Also, the exterior of the die is covered by porous graphite felt with thickness of ~10 mm, which is used as a thermal insulation to reduce the radiation loss and possible temperature gradient. Metal powders are sintered in vacuum at a temperature, pressure, holding time, and heating rate. After sintering, sump blasting is performed to remove the graphite on the sintered material [20].

A. Applications of Hybrid Spark Plasma Sintering

The hybrid sintering of materials has been studied in the literature. Metal and ceramic powders were fabricated in different conditions and the effect of parameters on mechanical properties was observed.

B. Tungsten Heavy Alloys

Hybrid sintering of Tungsten alloys (93W-4.9Ni-2.1Fe) was investigated. Tungsten alloys were sintered in the same conditions using the spark plasma sintering and hybrid spark plasma sintering techniques with diameter 30 mm and 60 mm respectively. After sintering, it was observed that the material sintered with 30mm (HSPS), 30 mm (SPS) and 60 mm (HSPS) had a relative density of ≥ 99.2% close to the theoretical density while 60 mm (SPS) had the least density. The

microstructure evolution and the hardness of 60 mm alloys varied from the edge to the core of the samples. Also, the sintered sample with 60 mm-HSPS had a bending strength 0f 1115 MPa while 60 mm -SPS had 920 MPa strength. HSPS samples had better mechanical properties as compared to the SPS samples as a result of even heat distribution. This alloys find their applications in high temperature such as radiation shields, and kinetic energy penetrators environment [20]. The figure below indicates the relative densities of various samples via different sintering methods. The percentage of the relative density of each sample was observed, with HSPS-30mm showing greater relative density.

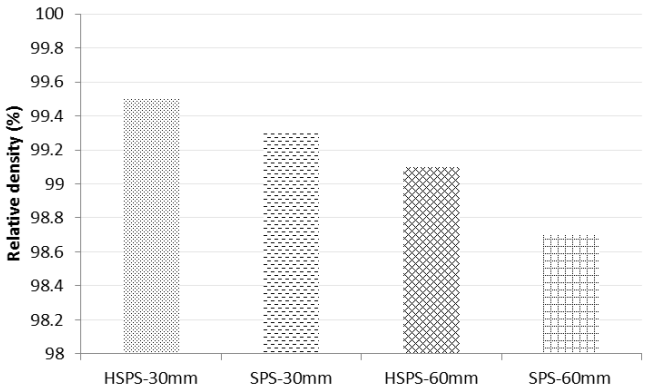

Fig. 3. Effect of sintering technique and sample diameter on relative density of W-Ni-Fe alloys (Courtesy of [18]).

C. Niobium Based Refractory System

This shows the study of Nb--Si composites with different percentages of Si content ranging from 12—18%. The specimen was sintered via hybrid spark plasma sintering and hot pressing technique at temperature of 1400 ^{o}C, and the sintered specimen was characterized. The relative density of sintered specimen with 14% Si via hot pressing had the least relative density as compared with hybrid specimen.

Thermal diffusivity of the specimen indicated that the sintered composites were two times lower than that of the constituting component due to the effect of porosity. However, the silicon content added to the composites had effect on the thermal conductivity of the composites. Specimen with 18% Si content had the least thermal conductivity. There was an improvement in the mechanical properties of sintered hybrid specimen. Niobium based refractory find its application in the aerospace industry especially in high oxidizing environment [23].

D. Silicon Carbide Ceramic

Brazing of silicon carbide specimen was carried out through hybrid spark plasma sintering at the heating rate of 100 ^{o}C/min for 15 min, at the temperature of 1800 ^{o}C and the pressing force of 15 KN in a brazing vacuum. The specimen was sectioned into three parts after sintering, the first and the third parts were tested for thermal shock while the second part was analyzed using the scanning electron microscope. The thermal cycling resistance of the brazed structure was enhanced by the addition of SiC and B powders to the braze (C+Si). This study was utilized in joining the silicon carbide ceramic and it is required in high endurance application such as car brakes and car clutches[24].

E. Nickel Alloys

Investigations of Ni50% -Fe was carried out using hybrid spark plasma sintering and sparks plasma sintering. The specimen was sintered in the same condition. It was observed that the densification and the grain size increased which facilitate necking of grains. Hardness increases from the edge to the core of the sintered specimen and the relative density of the hybrid specimen was close to the theoretical density. The sintering temperatures have a significant effect on the microstructures which later improve the mechanical properties. Nickel alloys find its application in the aerospace industry where high temperature is needed [20].

F. Hafanium Diboride –Refractory Ceramic

Hybrid spark plasma sintering of HfB2-SiC composites was investigated. The composite was sintered using different modes which include SPS, inductive heating and the hybrid sintering. It was observed that the sintered composites in SPS and inductive heating failed to provide the required quality needed with density $\leq$ 2.4%. Also, a temperature gradient of 150 ^{o}C was seen when sintered using inductive method. The sintered composite via hybrid sintering technique had an improved relative density, and there was no evidence of crack or shear when resistance test was carried out. This composite is widely used in aircraft vehicles where high temperature and oxidizing medium is required [11].

IV. Effect of Optimizing the Process Parameters of Hybrid Spark Plasma Sintering

The process parameters of hybrid spark plasma sintering such as temperature, pressure, heating rate and the holding time have effect on the sintered material. In a bit to improve the mechanical properties of the material, increase in the sintering temperature will have a positive effect on the particle atomic bonding that causes rapid densification and invariably the hardness of the sintered materials increases. However, holding time, pressure and the heating rate can improve the phases, microstructures and the mechanical properties of the sintered material [13].

V. Hybrid Sintering of Nanomaterials

Nanomaterials are considered as constituents with nanoscale dimensions usually between 1-100nm and they tend to possess better thermo-mechanical properties [25]. Fabricating nanomaterial has been a challenge due to the difficulties controlling grain growth during sintering. Consequently, the use of conventional sintering technique of consolidating powder often result in grain growth due to long sintering cycle involved [2]. Nevertheless, grain growth can be minimized through careful control of the sintering temperature and time in order to avoid the deterioration of the mechanical properties of the material [14]. However, temperature distribution within and across the material can determine the uniform microstructure and properties of the material. Sintered nanomaterial with either cold center or edge due to uneven temperature distribution can affect the uniform microstructure and properties of the material. It is imperative to attain a uniform microstructure and properties

across the regime of bulk materials during the fabrication of materials into near -net shape by utilizing the techniques with a faster heating rate.

VI. Temperature Distribution in Sintering Process

Temperature distribution within and across the regime of a material during sintering operations has played roles in affecting the properties of the materials [26]. However, this has been evaluated using the finite element method. Finite element method is a numerical model used to understand the heat transfer within an object. In order to simulate during fabrication process, the sets of data are required as control; sintering temperature of the mold and the sample, the pressing force, holding time and time of force application. The data needed for the finite element modeling are entered in the central processing unit during sintering and the outcomes are compared with the experimental data [22].In the hybrid heating or sintering, the temperature distribution within the material is quite different from other sintering techniques because of the rapid heating rate. Fig. 4 denotes a material under the influence of homogeneous heat distribution with similar core and edge and same temperature is being maintained in the material. The product obtained from the material could possess high hardness and fine microstructures. Also, Fig. 5 denote a material under the influence of heterogeneous heat distribution with cold core and hot edge.

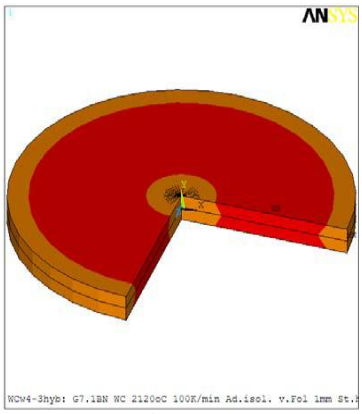

Fig. 4. Representation of hybrid SPS (courtesy of [27]).

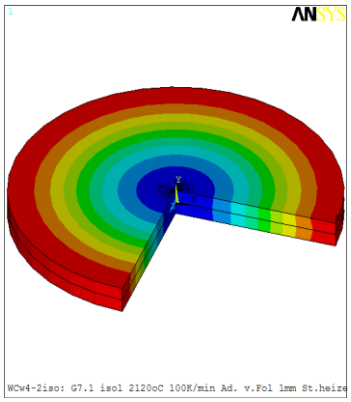

Fig. 5. Representation of hot pressing (courtesy of [27].

VII. Conclusion

In this reviewed report, the techniques of hybrid spark plasma sintering of materials was highlighted, its effect on the microstructures and properties of materials as well as its various applications in industries. Hybrid sintering operations proposes to be a rapid sintering method with the combination of two heating systems and its processes was compared with other sintering processes. The analyzed data indicates that fabricated product via hybrid sintering exhibited high relative density, improved hardness and microstructures as compared to other sintering techniques. Better mechanical properties can be easily achieved by hybrid spark plasma sintering. Furthermore, there is need to improve on the sintering capability of hybrid sintering in order to anticipate the evolution of novel materials.

Acknowledgment

The author wishes to thank National Research Foundation (NRF)-South Africa and Centre for Nanoengineering and Tribocorrosion, University of Johannesburg, South Africa.

References

[1] K. Kondoh, T. Threrujirapapong, H. Imai, J. Umeda, and B. Fugetsu, "Characteristics of powder metallurgy pure titanium matrix composite reinforced with multi-wall carbon nanotubes," *Composites Science and Technology*, vol. 69, no. 7, pp. 1077-1081, 2009.

[2] C. Y. Tang, C. T. Wong, L. N. Zhang, M. T. Choy, T. W. Chow, K. C. Chan, T. M. Yue, and Q. Chen, "In situ formation of Ti alloy/TiC porous composites by rapid microwave sintering of Ti6Al4V/MWCNTs powder," *Journal of Alloys and Compounds*, vol. 557, pp. 67-72, 2013.

[3] B. A. Obadele, O. O. Ige, and P. A. Olubambi, "Fabrication and characterization of titanium-nickel-zirconia matrix composites prepared by spark plasma sintering," *Journal of Alloys and Compounds*, vol. 710, pp. 825-830, 2017.

[4] W. Matizamhuka, "Spark plasma sintering (SPS)-an advanced sintering technique for structural nanocomposite materials," *Journal of the Southern African Institute of Mining and Metallurgy*, vol. 116, no. 12, pp. 1171-1180, 2016.

[5] M. Oghbaei and O. Mirzaee, "Microwave versus conventional sintering: A review of fundamentals, advantages and applications," *Journal of Alloys and Compounds*, vol. 494, no. 1, pp. 175-189, 2010.

[6] A. O. Adegbenjo, P. A. Olubambi, J. H. Potgieter, M. B. Shomgwe, and M. M. Ramakokovhu, "Spark plasma sintering of graphitized multi-walled carbon nanotube reinforced Ti6Al4V," *Materials & Design*, vol. 128, pp. 119-129, 2017.

[7] Z. H. Zhang, Z. F. Liu, J. F. Lu, X. B. Shen, F. C. Wang, and Y. D. Wang, "The sintering mechanism in spark plasma sintering–Proof of the occurrence of spark discharge," *Scripta Materialia*, vol. 81, pp. 56-59, 2014.

[8] M. Tokita, "Spark plasma sintering (SPS) method, systems and applications," *Handbook of Advanced Ceramics*, pp. 1149-1177, 2013.

[9] S. Wei, Z. H. Zhang, F. C. Wang, X. B. Shen, H. N. Cai, S. K. Lee, and L. Wang, "Effect of Ti content and sintering temperature on the microstructures and mechanical properties of TiB reinforced titanium composites synthesized by SPS process," *Materials Science and Engineering*, vol. 560, pp. 249-255, 2013.

[10] M. B. Shongwe, S. Diouf, M. O. Durowoju, P. A. Olubambi, M. M. Ramakokovhu, and B. A. Obadele, "A comparative study of spark plasma sintering and hybrid spark plasma sintering of 93W–4.9Ni–2.1Fe heavy alloy," *International Journal of Refractory Metals and Hard Materials*, vol. 55, pp. 16-23, 2016.

[11] D. V. Grashchenkov, O. Y. Sorokin, Y. E. Lebedera, and M. L. Vaganova, "Specific features of sintering of HfB2-based refractory ceramic by hybrid spark plasma sintering," *Russian Journal of Applied Chemistry*, vol. 88, no. 3, pp. 386-393, 2015.

[12] M. Rajadurai and A. R. Annamalai, "Effect of various sintering methods on microstructures and mechanical properties of titanium and its alloy (Ti–Al–V–X)," *Russian Journal of Non-Ferrous Metals*, vol. 58, no. 4, pp. 434-448, 2017.

[13] S. R. Oke, O. O. Ige, O. E. Falodun, B. A. Obadele, M. B. Shongwe, and P. A. Olubambi, "Optimization of process parameters for spark plasma sintering of nano structured SAF 2205 composite," *Journal of Materials Research and Technology*, 2017.

[14] K. A. Khalil, "Advanced sintering of nano-ceramic materials, in ceramic materials-progress in modern ceramics," 2012.

[15] R. Abedinzadeh, S. M. Safavi, and F. Karimzadeh, "A study of pressureless microwave sintering, microwave-assisted hot press sintering and conventional hot pressing on properties of aluminium/alumina nanocomposite," *Journal of Mechanical Science and Technology*, vol. 30, no. 5, pp. 1967-1972, 2016.

[16] Y. E. Feng, H. Zhaopang, Z. Haijiao, and L. Limeng, "Densification and mechanical properties of spark plasma sintered B4C with Si as a sintering aid," *Journal of the American Ceramic Society*, vol. 93, no. 10, pp. 2956-2959, 2010.

[17] K. S. Munir, Y. Zheng, D. Zhang, J. Liu, X. Li, and C. Wen, ''Microstructure and mechanical properties of carbon nanotubes reinforced titanium matrix composites fabricated via spark plasma sintering," *Materials Science and Engineering*, vol. 688, pp. 505-523, 2107.

[18] M. B. Shongwe, M. M. Ramakokovhu, M. L. Lethabane and P. A. Olubambi, "Comparison of spark plasma sintering and hybrid spark plasma sintering of Ni-Fe alloys," in *Proc. the World Congress on Engineering*, 2017, vol. II.

[1] A. O. Adegbenjo, E. Nsiah-Baafi, M. B. Shongwe, M. M. Ramakokovhu, P. A. Olubamb, and J. H. Potgieter, "Sliding wear characteristics of sintered Ti6Al4V alloy as a function of holding time," 2016.

[19] M. B. Shongwe, S. Diouf, M. O. Durowoju, and P. A. Olubambi, "Effect of sintering temperature on the microstructure and mechanical properties of Fe–30%Ni alloys produced by spark plasma sintering," *Journal of Alloys and Compounds*, vol. 649, pp. 824-832, 2015.

[20] O. Guillion, J. Gonzalez-Julian, B. Dargatz, T. Kessel, G. Schierning, J. Rathel, and M. Herrmann, "Field-assisted sintering technology/spark plasma sintering," *Mechanisms, Materials, and Technology Developments, Advanced Engineering Materials*, vol. 16, no. 7, pp. 830-849, 2014.

[21] A.V. Smirnov, D. I. Yushin *et al.*, "Spark plasma sintering of nanostructured powder materials," *Russian Engineering Research*, vol. 36, no. 3, pp. 249-254, 2016.

[22] V. V. Murasheva, Y. V. Loshchinin *et al.*, "Study of the effect of composition on the microstructure and thermophysical properties of niobium-based refractory systems," *Inorganic Materials: Applied Research*, vol. 7, no. 1, pp. 102-109, 2016.

[23] O. Y. Sorokin, M. L. Vagavova, S. S. Solntsev, and I. V. Osin, "Joining of silicon carbide ceramic by hybrid spark plasma sintering," *Russian Journal of Applied Chemistry*, vol. 88, no. 5, pp. 839-845, 2015

[24] C. Veiga, J. Davim, and A. Loureiro, "Properties and applications of titanium alloys, a brief review," *Rev. Adv. Mater. Sci*, vol. 32, no. 2, pp. 133-148, 2012.

[25] H. Kessel and J. Hennicke, "Aspects concerning the super-fast sintering of powder metallic and ceramic materials," *International Ceramic Review*, vol. 56, no. 3, pp. 164-166, 2007.

[26] H. U. Kessel, J. Hennicke, R. Kirchner, and T. Kessel, "Rapid sintering of novel materials by FAST/SPS — Further development to the point of an industrial production process with high cost efficiency," *FCT Systeme GmbH*, 2010.

O. O. Ayodele has studied metallurgical and materials engineering at Federal University of Technology, Akure, Ondo State, Nigeria. He has been working in the industry since 2015 before he decided to pursue his doctoral degree at the University of Johannesburg. His research field of interest is powder metallurgy and the focus is on hybrid sintering of materials. He is currently working on the fabrication of titanium based materials.

M. B. Shongwe is a senior lecturer at the Department of Chemical, Metallurgical and Materials Engineering. He is currently the head of the Metallurgical Section, Department of Chemical, Metallurgical and Materials Engineering, Tshwane University of Technology, Pretoria, South Africa. His research interests include powder metallurgy, nanostructured materials synthesis and characterization for high temperature and advanced applications which centers on the mechanical, corrosion, and wear behaviour.

P. A. Olubambi is a professor at the Department of Chemical Engineering Technology and currently the head of School of Mining, Metallurgy and Chemical Engineering, University of Johannesburg, Johannesburg, South Africa. His research interest centers on powder metallurgy, tribocorrosion, and nanomechanics.

B. A. Obadele is a post-doctoral researcher at the Department of Chemical Engineering Technology, University of Johannesburg, Johannesburg, South Africa. His research interest includes corrosion, tribocorrosion, materials synthesis, and characterization.

T. Langa is an assistance lecturer at the Department of Metallurgy Engineering Technology, University of Johannesburg, Johannesburg, South Africa. His research interest includes powder metallurgy, materials synthesis and characterization.